MICRO MATIC

POWER PACK SERVICE MANUAL

MMPP4301-EP
MMPP4301
MMPP4301-WC
MMPP4301-PKG
MMPP4301-PKG-WC
MMPP4301-EP
MMPP4301
MMPP4301-PKG

MMPP4302
MMPP4302-WC
MMPP4302-PKG
MMPP4302-PKG-WC
MMPP4302
MMPP4302-PKG

MMPP4303-PKG
MMPP4303-PKG-WC
MMPP4303-PKG-3
MMPP4303-PKG
MMPP4303-PKG-3

MMPP4305-PKG
MMPP4305-PKG-WC
MMPP4305-PKG-3
MMPP4305-PKG-WC3
MMPP4305-PKG
MMPP4305-PKG-3

MMPP4307-PKG
MMPP4307-PKG-WC
MMPP4307-PKG-3
MMPP4307-PKG-3-WC
MMPP4307-PKG-4
MMPP4307-PKG-4-WC
MMPP4307-PKG
MMPP4307-PKG-3
MMPP4307-PKG-4

v11.0

Intertek

TABLE OF CONTENTS

EQUIPMENT SPECIFICATIONS 3-7
INSTALLATION + OPERATION 8-10
MAINTENANCE 10
CHANGING GLYCOL PUMP 11
REPLACING MOTOR 12
REPLACING THERMOSTAT 12-13
TROUBLESHOOTING 14
SPARE PARTS 15
WATER COOLED UNITS HOOK UP 16
WIRING DIAGRAMS 17-19
WARRANTY INFORMATION 20

EQUIPMENT SPECIFICATIONS					
MODEL	**MMPP4301-EP**	**MMPP4301**	**MMPP4301-WC**	**MMPP4301-PKG**	**MMPP4301-PKG-WC**
Type	Air Cooled	Air Cooled	Water Cooled**	Air Cooled	Water Cooled**
BTUs**	2,300	2,300	2,300	2,300	2,300
Compressor HP	1/3	1/3	1/3	1/3	1/3
Glycol Pumps	1	1	1	2	2
Pump Type	Vertical	Rotary Vane	Rotary Vane	Rotary Vane	Rotary Vane
Pump GPH	240	80	80	80	80
Pump Motor HP	1/3	1/3	1/3	1/3	1/3
Pump Inlet/Outlet Barbs	9.52mm (3/8")	9.52mm (3/8")	9.52mm (3/8")	9.52mm (3/8")	9.52mm (3/8")
Plug Type	5-15P 	5-15P 	5-15P 	L5-30P 	L5-30P 
Voltage	115	115	115	115	115
Amps (Running)	7.0A	12.1A	11.6A	17.7A	17.2A
Refrigerant	R513a	R513a	R513a	R513a	R513a
Charge (oz.)	0.28 kg (10 oz)	0.34 kg (12 oz)	0.34 kg (12 oz)	0.34 kg (12 oz)	0.28 kg (10 oz)
Refrigerant Running Pressures	18 (low) / 140 (high)	18 (low) 140 (high)	18 (low) 140 (high)	18 (low) 140 (high)	18 (low) 140 (high)
Dimensions L x W x H Including pump(s) and motor(s)	26.12" x 17.12"x 21.56"	30" x 18" x 27.75"	30" x 18" x 28.75"	30" x 18" x 27.75"	30" x 18" x 28.75"
Weight (lbs)	41 kg / 90 lbs	55 kg / 120 lbs	55 kg / 120 lbs	58 kg / 128 lbs	58 kg / 128 lbs
Bath Capacity (gal)	4.5 gal / 17 L	11.5 gal / 43.5 L	11.5 gal / 43.5 L	11.5 gal / 43.5 L	11.5 gal / 43.5 L
Bath Insulation Thickness	1.5"	1.5"	1.5"	1.5"	1.5"
Inlet Water Temperature	NA	NA	Min 45º / Max 85º	NA	Min 45º / Max 85º
Inlet Water Pressure	NA	NA	Min 40 psi Max 120 psi	NA	Min 40 psi Max 120 psi
Water Inlet & Outlet Fitting	NA	NA	9.52mm (3/8")	NA	9.52mm (3/8")
Minimum Water Pipe Size	NA	NA	3/8"	NA	3/8"
Flow Rate Minimum	NA	NA	0.3 gpm	NA	0.3 gpm
Pressure Drop	NA	NA	6 psi	NA	6 psi
Approval	ETL Listed	ETL Listed	ETL Listed	ETL Listed	ETL Listed

**Rated at 20° F evaporator temperature and 90° F ambient temperature. †.3GPM, water is only used when the temperature of the condenser rises high enough to open the cooling inlet valve. This is approximately 40% of the operating time depending on the ambient temperature and usage. Condenser Inlet Water Temperature: Minimum 45° F / Maximum 85° F

EQUIPMENT SPECIFICATIONS					
MODEL	**MMPP4302**	**MMPP4302-WC**	**MMPP4302-PKG**	**MMPP4302-PKG-WC**	**MMPP4303-PKG**
Type	Air Cooled	Water Cooled**	Air Cooled	Water Cooled**	Air Cooled
BTUs**	3,600	3,600	3,600	3,600	5,100
Compressor HP	1/2	1/2	1/2	1/2	3/4
Glycol Pumps	1	1	2	2	2
Pump Type	Rotary Vane	Rotary Vane	Rotary Vane	Rotary Vane	Rotary Vane
Pump GPH	80	80	80	80	80
Pump Motor HP	1/3	1/3	1/3	1/3	1/3
Pump Inlet/Outlet Barbs	9.52mm (3/8")	9.52mm (3/8")	9.52mm (3/8")	9.52mm (3/8")	9.52mm (3/8")
Plug Type	5-20P 	5-20P 	L5-30P 	L5-30P 	6-20P* 
Voltage	115	115	115	115	208/230
Amps (Running)	15.4A	14.9A	21.0A	20.5A	9.5A
Refrigerant	R513a	R513a	R513a	R513a	R513a
Charge (oz.)	0.45 kg (16 oz)	0.51 kg (18 oz)	0.45 kg (16 oz)	0.51 kg (18 oz)	0.79 kg (28 oz)
Refrigerant Running Pressures	18 (low) 140 (high)	18 (low) 140 (high)	18 (low) 140 (high)	18 (low) 140 (high)	18 (low) 140 (high)
Dimensions L x W x H Including pump(s) and motor(s)	30" x 18" x 29.75"	30" x 18" x 28.75"	30" x 18" x 29.75"	30" x 18" x 28.75"	30" x 18" x 29.75"
Weight (lbs)	71 kg / 157 lbs	80 kg / 175 lbs	71 kg / 157 lbs	71 kg / 157 lbs	80 kg / 175 lbs
Bath Capacity (gal)	11.5 gal / 43.5 L	11.5 gal / 43.5 L	11.5 gal / 43.5 L	11.5 gal / 43.5 L	11.5 gal / 43.5 L
Bath Insulation Thickness	1.5"	1.5"	1.5"	1.5"	1.5"
Inlet Water Temperature	NA	Min 45º / Max 85º	NA	Min 45º / Max 85º	NA
Inlet Water Pressure	NA	Min 40 psi Max 120 psi	NA	Min 40 psi Max 120 psi	NA
Water Inlet & Outlet Fitting	NA	9.52mm (3/8")	NA	9.52mm (3/8")	NA
Minimum Water Pipe Size	NA	3/8"	NA	3/8"	NA
Flow Rate Minimum	NA	0.5 gpm	NA	0.5 gpm	NA
Pressure Drop	NA	8 psi	NA	8 psi	NA
Approval	ETL Listed	ETL Listed	ETL Listed	ETL Listed	ETL Listed

**Rated at 20° F evaporator temperature and 90° F ambient temperature. †.3GPM, water is only used when the temperature of the condenser rises high enough to open the cooling inlet valve. This is approximately 40% of the operating time depending on the ambient temperature and usage. Condenser Inlet Water Temperature: Minimum 45° F / Maximum 85° F

*Units manufactured prior to 2/1/2022 were produced with a 6-15P plug.

Power pack series models (MMPP4301, MMPP4302, MMPP4303 and MMPP4305) manufactured after 3/1/2023 use R513a refrigerant. Series models MMPP4307 manufactured after 1/1/2023 use R448a refrigerant.

EQUIPMENT SPECIFICATIONS					
MODEL	**MMPP4303-PKG-WC**	**MMPP4303-PKG-3**	**MMPP4303-PKG-3-WC**	**MMPP4305-PKG**	**MMPP4305-PKG-WC**
Type	Water Cooled**	Air Cooled	Water Cooled**	Air Cooled	Water Cooled**
BTUs**	5,100	5,100	5,100	7,250	7,250
Compressor HP	3/4	3/4	3/4	1	1
Glycol Pumps	2	3	3	2	2
Pump Type	Rotary Vane	Rotary Vane	Rotary Vane	Rotary Vane	Rotary Vane
Pump GPH	80	80	80	80	80
Pump Motor HP	1/3	1/3	1/3	1/3	1/3
Pump Inlet/Outlet Barbs	9.52mm (3/8")	9.52mm (3/8")	9.52mm (3/8")	9.52mm (3/8")	9.52mm (3/8")
Plug Type	6-20P* 	6-20P 	6-20P 	6-20P* 	6-20P* 
Voltage	208/230	208/230	208/230	208/230	208/230
Amps (Running)	8.4A	11A	9.9A	11.0A	9.5A
Refrigerant	R513a	R513a	R513a	R513a	R513a
Charge (oz.)	0.51 kg (18 oz)	0.79 kg (28 oz)	0.51 kg (18 oz)	0.56 kg (20 oz)	0.56 kg (20 oz)
Refrigerant Running Pressures	18 (low) 140 (high)	18 (low) 140 (high)	18 (low) 140 (high)	18 (low) 140 (high)	18 (low) 140 (high)
Dimensions L x W x H Including pump(s) and motor(s)	30" x 18" x 28.75"	30" x 18" x 29.75"	30" x 18" x 28.75"	37.12" x 18.75" x 31.15"	37.12" x 18.75" x 31.5"
Weight (lbs)	80 kg / 175 lbs	91 kg / 200 lbs	80 kg / 175 lbs	98 kg / 215 lbs	98 kg / 215 lbs
Bath Capacity (gal)	11.5 gal / 43.5 L	11.5 gal / 43.5 L	11.5 gal / 43.5 L	11.5 gal / 43.5 L	11.5 gal / 43.5 L
Bath Insulation Thickness	1.5"	1.5"	1.5"	1.5"	1.5"
Inlet Water Temperature	Min 45º / Max 85º	NA	Min 45º / Max 85º	NA	Min 45º / Max 85º
Inlet Water Pressure	Min 40 psi Max 120 psi	NA	Min 40 psi Max 120 psi	NA	Min 40 psi Max 120 psi
Water Inlet & Outlet Fitting	9.52mm (3/8")	NA	9.52mm (3/8")	NA	9.52mm (3/8")
Minimum Water Pipe Size	3/8"	NA	3/8"	NA	3/8"
Flow Rate Minimum	0.58 gpm	NA	0.58 gpm	NA	0.65 gpm
Pressure Drop	8 psi	NA	8 psi	NA	9 psi
Approval	ETL Listed	ETL Listed	ETL Listed	ETL Listed	ETL Listed

**Rated at 20° F evaporator temperature and 90° F ambient temperature. †.3GPM, water is only used when the temperature of the condenser rises high enough to open the cooling inlet valve. This is approximately 40% of the operating time depending on the ambient temperature and usage. Condenser Inlet Water Temperature: Minimum 45° F / Maximum 85° F

*Units manufactured prior to 2/1/2022 were produced with a 6-15P plug.

EQUIPMENT SPECIFICATIONS					
MODEL	**MMPP4305-PKG-3**	**MMPP4305-PKG-3-WC**	**MMPP4307-PKG**	**MMPP4307-PKG-WC**	**MMPP4307-PKG-3**
Type	Air Cooled	Water Cooled**	Air Cooled	Water Cooled**	Air Cooled
BTUs**	7,250	7,250	11,500	11,500	11,500
Compressor HP	1	1	1 1/2	1 1/2	1 1/2
Glycol Pumps	3	3	2	2	3
Pump Type	Rotary Vane	Rotary Vane	Rotary Vane	Rotary Vane	Rotary Vane
Pump GPH	80	80	80	80	80
Pump Motor HP	1/3	1/3	1/3	1/3	1/3
Pump Inlet/Outlet Barbs	9.52mm (3/8")	9.52mm (3/8")	9.52mm (3/8")	9.52mm (3/8")	9.52mm (3/8")
Plug Type	6-20P 	6-20P* 	6-20P 	6-20P 	6-20P 
Voltage	208/230	208/230	208/230	208/230	208/230
Amps (Running)	12.5A	11.4A	11.5A	9.9A	13.0A
Refrigerant	R513a	R513a	R448a	R448a	R448a
Charge (oz.)	0.56 kg (20 oz)	0.56 kg (20 oz)	1.04 kg (37 oz)	1.04 kg (37 oz)	1.04 kg (37 oz)
Refrigerant Running Pressures	18 (low) 140 (high)	18 (low) 140 (high)	55 (low) 260 (high)	55 (low) 260 (high)	55 (low) 260 (high)
Dimensions L x W x H Including pump(s) and motor(s)	37.12" x 18.75" x 31.5"	37.12" x 28.75" x 31.5"	38" x 20" x 36"	37.12" x 18.75" x 31.5"	38" x 30" x 36"
Weight (lbs)	131 kg / 290 lbs	98 kg / 215 lbs	134 kg / 295 lbs	134 kg / 295 lbs	134 kg / 295 lbs
Bath Capacity (gal)	11.5 gal / 43.5 L	11.5 gal / 43.5 L	11.5 gal / 43.5 L	11.5 gal / 43.5 L	11.5 gal / 43.5 L
Bath Insulation Thickness	1.5"	1.5"	1.5"	1.5"	1.5"
Inlet Water Temperature	NA	Min 45º / Max 85º	NA	Min 45º / Max 85º	NA
Inlet Water Pressure	NA	Min 40 psi Max 120 psi	NA	Min 40 psi Max 120 psi	NA
Water Inlet & Outlet Fitting	NA	9.52mm (3/8")	NA	9.52mm (3/8")	NA
Minimum Water Pipe Size	NA	3/8"	NA	3/8"	NA
Flow Rate Minimum	NA	0.65 gpm	NA	0.81 gpm	NA
Pressure Drop	NA	9 psi	NA	10 psi	NA
Approval	ETL Listed	ETL Listed	ETL Listed	ETL Listed	ETL Listed

**Rated at 20° F evaporator temperature and 90° F ambient temperature. †.3GPM, water is only used when the temperature of the condenser rises high enough to open the cooling inlet valve. This is approximately 40% of the operating time depending on the ambient temperature and usage. Condenser Inlet Water Temperature: Minimum 45° F / Maximum 85° F

*Units manufactured prior to 2/1/2022 were produced with a 6-15P plug.

EQUIPMENT SPECIFICATIONS			
MODEL	**MMPP4307-PKG-3-WC**	**MMPP4307-PKG-4**	**MMPP4307-PKG-4-WC**
Type	Water Cooled**	Air Cooled	Water Cooled**
BTUs**	11,500	11,500	11,500
Compressor HP	1 1/2	1 1/2	1 1/2
Glycol Pumps	3	4	4
Pump Type	Rotary Vane	Rotary Vane	Rotary Vane
Pump GPH	80	80	80
Pump Motor HP	1/3	1/3	1/3
Pump Inlet/Outlet Barbs	9.52mm (3/8")	9.52mm (3/8")	9.52mm (3/8")
Plug Type	6-20P* 	6-20P 	6-20P 
Voltage	208/230	208/230	208/230
Amps (Running)	11.4A	14.5A	14.5A
Refrigerant	R448a	R448a	R448a
Charge (oz.)	1.04 kg (37 oz)	1.04 kg (37 oz)	1.04 kg (37 oz)
Refrigerant Running Pressures	55 (low) 260 (high)	55 (low) 260 (high)	55 (low) 260 (high)
Dimensions L x W x H Including pump(s) and motor(s)	37.12" x 18.75" x 31.5"	38" x 30" x 36"	37.12" x 28.75" x 31.5"
Weight (lbs)	134 kg / 295 lbs	134 kg / 295 lbs	134 kg / 295 lbs
Bath Capacity (gal)	11.5 gal / 43.5 L	11.5 gal / 43.5 L	11.5 gal / 43.5 L
Bath Insulation Thickness	1.5"	1.5"	1.5"
Inlet Water Temperature	Min 45º / Max 85º	NA	Min 45º / Max 85º
Inlet Water Pressure	Min 40 psi Max 120 psi	NA	Min 40 psi Max 120 psi
Water Inlet & Outlet Fitting	9.52mm (3/8")	NA	9.52mm (3/8")
Minimum Water Pipe Size	3/8"	NA	3/8"
Flow Rate Minimum	0.81 gpm	NA	0.81 gpm
Pressure Drop	10 psi	NA	10 psi
Approval	ETL Listed	ETL Listed	ETL Listed

**Rated at 20° F evaporator temperature and 90° F ambient temperature. †.3GPM, water is only used when the temperature of the condenser rises high enough to open the cooling inlet valve. This is approximately 40% of the operating time depending on the ambient temperature and usage. Condenser Inlet Water Temperature: Minimum 45° F / Maximum 85° F

*Units manufactured prior to 2/1/2022 were produced with a 6-15P plug.

INSTALLATION AND OPERATION

1. Remove packaging from the unit in the vicinity of the area where it will be installed.
2. Carefully lift the unit into the desired position.

NOTE: DO NOT PUSH OR SLIDE UNIT – Damage will be caused to the legs if the unit is pushed into position.

PLACEMENT

- It is not recommended to install a power pack on top of a walk in cooler.
- It is not recommended to install a power pack outside.
- Always ensure a minimum clearance of 18 inches above and in front of a power pack. This allows for proper air flow around unit.
- Ambient operating temperature range is 50-90° F for all air cooled models.
- Power pack must be wired to a ground fault circuit interrupter per UL guidelines.

INSTALLATION STEPS

(MMPP4301-EP)

(Assure tower connections are complete.)

1. Connect one of the glycol tubes to the pump inlet. Insulate any exposed tubing.
2. Connect the second glycol line to the pump outlet. Insulate any exposed tubing.
3. Carefully push the glycol bath lid to one side, allowing sufficient space to fill the bath with liquid.
4. Inspect the bath for debris.
5. Fill the glycol bath with **Micro Matic Polar Flo®** glycol solution **(mixed 2 ½ parts water to 1 part glycol).** Fill the bath to the full level on the glycol level indicator.
6. Verify glycol mix ratio using propylene glycol refractometer. Correct mix ratio will result in a reading of +6 on the glycol refractometer.
7. Connect unit to the electrical outlets capable of handling the required voltage loads. This should be carried out by suitably trained personnel and comply with all state and national electrical codes.
8. Glycol level will fall as glycol is pumped through the glycol lines. Continue to fill the bath to the fill level on the glycol level indicator.
9. Replace top cover.
10. Inspect for any leaks.
11. Glycol temperature will fall slowly to 29° F.

    NOTE: To adjust the glycol temperature, please see Adjusting Electronic Thermostat.

INSTALLATION STEPS

(MMPP4301, MMPP4301-WC, MMPP4301-PKG, MMPP4301-PKG-WC, MMPP4302, MMPP4302-WC, MMPP4302-PKG, MMPP4302-PKG-WC, MMPP4303-PKG, MMPP4303-PKG-WC, MMPP4303-PKG-3, MMPP4305-PKG, MMPP4305-PKG-WC, MMPP4305-PKG-3, MMPP4305-PKG-WC3, MMPP4307-PKG, MMPP4307-PKG-WC, MMPP4307-PKG-3, MMPP4307-PKG-3-WC, MMPP4307-PKG-4, MMPP4307-PKG-4-WC)

(Assure tower connections are complete.)

1. Remove the refrigeration deck from the unit.
2. Inspect the glycol tank for any debris.
3. Connect one of the glycol lines from the trunk line to the pump outlet. Insulate any exposed tubing.
   NOTE: In units with more than one pump, connect a glycol line to each pump outlet.
4. Connect the second glycol line from each circuit to the glycol bath inlet.
5. Fill the glycol bath with **Micro Matic Polar Flo®** glycol solution:
   - MMPP4301, MMPP4301-WC, MMPP4301-PKG, MMPP4301-PKG-WC, MMPP4302, MMPP4302-WC, MMPP4302-PKG, MMPP4302-PKG-WC, MMPP4303-PKG, MMPP4303-PKG-WC, MMPP4303-PKG-3.
     Mix: 2 ½ parts water to 1 part glycol.
   - MMPP4305-PKG, MMPP4305-PKG-WC, MMPP4305-PKG-3, MMPP4305-PKG-WC3, MMPP4307-PKG, MMPP4307-PKG-3, MMPP4307-PKG-4)
     Mix: 7 parts distilled water to 5 parts glycol.
     Fill bath to the level of the fill line on the glycol level indicator.
6. Replace the refrigeration deck.
7. Connect electrical outlets capable of handling the required voltage loads. This should be carried out by suitably trained personnel and must comply with all state and national codes.
8. Connect pump/motor power cord to control box and turn on main power switch. Series MMPP4305 and MMPP4307 a pump must be circulating before compressor is started. Upon start up only one pump should be connected until the unit's set point is reached. Once set point has been reached connect second pump/motor. Continue this process until all pump/motors have been connected.
9. Glycol level will fall as glycol is pumped through the glycol lines. Continue to fill the bath to the full level on the glycol level indicator.
10. Verify proper glycol mix ratio using a propylene glycol refractometer. Correct mix ratio will result in a reading of +6 on the glycol refractometer for all models excluding Series MMPP4305 and MMPP4307. Series MMPP4305 and MMPP4307 correct mix ratio will result in a refractometer reading of -6.
11. Inspect for any leaks.
12. Temperature of the glycol will fall slowly to 28-29° F.

MAINTENANCE

1. Inspect the unit monthly to ensure that the glycol level is maintained to the full level.
2. If the level is low replace with a **Micro Matic Polar Flo®** glycol solution:
   - MMPP4301-EP, MMPP4301, MMPP4301-WC, MMPP4301-PKG, MMPP4301-PKG-WC, MMPP4302, MMPP4302-WC, MMPP4302-PKG, MMPP4302-PKG-WC, MMPP4303-PKG, MMPP4303-PKG-WC, MMPP4303-PKG-3.
     Mix: 2 ½ parts water to 1 part glycol. Mixing glycol correctly will result in a refractometer reading of +6.
   - MMPP4305-PKG, MMPP4305-PKG-WC, MMPP4305-PKG-3, MMPP4305-PKG-WC3, MMPP4307-PKG, MMPP4307-PKG-WC, MMPP4307-PKG-3, MMPP4307-PKG-3-WC, MMPP4307-PKG-4, MMPP4307-PKG-4-WC.
     Mix: 7 parts distilled water to 5 parts glycol. Mixing glycol properly will result in a refractometer reading of -6.
3. If there is evidence of ice build up in the unit, allow the ice to melt and replace all the water/glycol solution with a fresh solution mixed per above instructions.
4. The glycol/water solution should be changed approximately every 18 months. In regions of high humidity considerations should be given to replacing the solution on an annual basis.
   - MMPP4305 and MMPP4307 series glycol chillers contain a screen in the glycol return manifold. This screen must be cleaned when glycol service is performed.
5. Check and clean the condenser fins every sixty (60) days.
6. Check that there is adequate air flow through the unit ensuring enough space all around and that there are no obstructions in front of the air flow vents.
7. Check the condition and effectiveness of the trunk line insulation.
8. At regular intervals, to be determined by the owner, the unit should be checked for electrical safety.

ELECTRONIC TEMPERATURE CONTROL WITH DISPLAY

NOTE: When the unit leaves the factory, the electronic thermostat is pre-set to the following parameters:

Temperature Scale:	**F (Fahrenheit)**
Setpoint:	**29° F**
Differential:	**3° F**

SERIES MMP4305 AND MMPP4307

Temperature Scale:	**F (Fahrenheit)**
Setpoint:	**28° F**
Differential:	**5° F**

NOTE: To ensure the correct operation of your unit these parameters must be adhered to.



User/customer can change the temperature by pressing the up and down arrows.

CHANGING GLYCOL PUMP

(MMPP4301-EP)

1. Unplug unit from receptacle.
2. Remove four (4) screws holding pump to bath lid.
3. Cut tubing slightly above outlet fitting on pump.
4. Remove pump through hole in top of bath lid.
5. Insert new pump through opening in lid.
6. Attach pump outlet hose and clamp with stainless steel clamp.
7. Replace mounting screws and plug unit into receptacle.

CHANGING GLYCOL PUMP

(MMPP4301, MMPP4301-WC, MMPP4301-PKG, MMPP4301-PKG-WC, MMPP4302, MMPP4302-WC, MMPP4302-PKG, MMPP4302-PKG-WC, MMPP4303-PKG, MMPP4303-PKG-WC, MMPP4303-PKG-3, MMPP4305-PKG, MMPP4305-PKG-WC, MMPP4305-PKG-3, MMPP4305-PKG-WC3, MMPP4307-PKG, MMPP4307-PKG-WC, MMPP4307-PKG-3, MMPP4307-PKG-3-WC, MMPP4307-PKG-4, MMPP4307-PKG-4-WC)

Note: A pinch off tool is required to complete this repair

1. Unplug unit from receptacle.
2. Pinch off glycol supply line to bottom of pump allowing enough room to remove clamp safely.
3. Hold pump firmly and loosen clamp between pump and motor.
4. With clamp loose remove pump and drive key.
5. Install new key and pump by reattaching clamp making sure alignment of key is correct between pump and motor.
6. Reattach glycol supply hose and install clamp.
7. Remove pinch off tool.
8. On Series MMPP4305 and MMPP4307 check and clean screen located in glycol return manifold.
9. Plug motor cord into receptacle.

REPLACING MOTOR

(MMPP4301-EP, MMPP4301, MMPP4301-WC, MMPP4301-PKG, MMPP4301-PKG-WC, MMPP4302, MMPP4302-WC, MMPP4302-PKG, MMPP4302-PKG-WC, MMPP4303-PKG, MMPP4303-PKG-WC, MMPP4303-PKG-3, MMPP4305-PKG, MMPP4305-PKG-WC, MMPP4305-PKG-3, MMPP4305-PKG-WC3, MMPP4307-PKG, MMPP4307-PKG-WC, MMPP4307-PKG-3, MMPP4307-PKG-3-WC, MMPP4307-PKG-4, MMPP4307-PKG-4-WC)

1. Unplug unit from receptacle.
2. Support pump and loosen clamp holding pump to motor. As clamp is loosened pump will eventually disconnect from motor. Make sure pump does not damage glycol supply line as it becomes free from motor.
3. With pump free from motor remove drive key and replace.
4. While supporting motor remove four (4) nuts and hardware from mounting studs.
5. Mount new motor by aligning mounting bracket with mounting studs and reattaching mounting nuts and hardware. **Note: new motor is supplied with mounting bracket.**
6. Reattach pump to motor with clamp making sure new drive key aligns with motor shaft.
7. Plug cord into receptacle.

REPLACING THERMOSTAT IN ALL UNITS

1. Unplug power pack
2. Insert a small flat head screwdriver between the thermostat faceplate and the panel and twist the screwdriver at the top, bottom, and ends of the faceplate to remove the faceplate.
3. After the faceplate is removed, slide the thermostat forward through the mounting hole.
4. Remove the wires from the slip on terminals and the temperature probe from the back of the thermostat.
5. Insert the yellow wire on terminal one, black wire on terminal two, white wire on terminal three. The temperature probe flat plug will push into s1 on the new thermostat.
6. Slide the thermostat back into the mounting hole and snap the faceplate onto the thermostat.

REPLACING A DIXELL THERMOSTAT WITH A DANFOSS THERMOSTAT

1. Unplug the unit from the receptacle.
2. Remove the screws that are holding the thermostat housing to the front of the unit, and then remove the Dixell thermostat from the housing.
3. Cut the wires off the old harness on the Dixell thermostat.
4. Attach the yellow wire from the Danfoss thermostat to either the black wire with a red stripe or the yellow wire on the harness.
5. Attach the white wire from the Danfoss thermostat to the white wire on the harness.
6. Attach the black wire from the Danfoss thermostat to the black and red wires on the harness.
7. Replace the Dixell sensor with the Danfoss sensor that is provided and already attached to the Danfoss control.
8. Reattach the thermostat housing to the unit and plug it back into the receptacle.

REPLACING A DANFOSS THERMOSTAT WITH A DANFOSS THERMOSTAT

1. Remove the black, white, and yellow wires from the Wago quick connection points on the back of your current control.
2. Remove the current Danfoss control and install the new one, ensuring that the wires supplied remain connected to the control.
3. Connect the black wire from the new Danfoss control to the Wago black wire connection point.
4. Connect the white wire from the new Danfoss control to the Wago white wire connection point.
5. Connect the yellow wire from the new Danfoss control to the Wago yellow wire connection point.
6. To ensure accurate readings, we recommend replacing the current sensor with the new one.
7. Reattach thermostat housing to unit and plug into receptacle.

REWIRING A DANFOSS THERMOSTAT INTO A CONTROL BOX WITH A DIXELL THERMOSTAT

1. Cut the black, white, red and yellow wires from the old harness on the Dixell thermostat.
2. Attach the yellow wire from the Danfoss thermostat to the yellow wire from the harness.
3. Attach the white wire from the Danfoss thermostat to the white wire from the harness.
4. Attach the black wire from the Danfoss thermostat to the black and red wires from the harness.

TROUBLESHOOTING

TROUBLE		CAUSE		SOLUTION	
1.	Excessive foam	A.	Warm walk-in cooler	A.	Adjust cooler temperature to 36° to 38° F (use a quality thermometer)
		B.	Check applied pressure to keg	B.	Adjust setting on regulator for proper flow rate of two (2) ounces per second.
		C.	Check equipment	C.	Check the physical equipment from keg to faucet
		D.	Warm product lines	D.	Refer to #5
2.	Compressor does not start (no hum), but the fan motor runs.	A.	Compressor relay or capacitor malfunction	A.	Replace compressor relay or capacitor
		B.	Inadequate voltage	B.	Measure voltage across common and run terminal on compressor. Voltage must not drop below 90% of rated voltage.
		C.	Compressor failure	C.	Replace compressor
3.	Compressor starts and continues to run until freeze up and will not cut off.	A.	Thermostat control failure	A.	Replace thermostat
		B.	Freon leak	B.	Repair leak and recharge
4.	Compressor does not run but hums.	A.	Inadequate voltage	A.	Measure voltage across common and run terminal on compressor. Voltage must not drop below 90% of rated voltage.
		B.	Starting relay malfunction	B.	Replace starting relay. Be sure to use correct relay. Failure to use correct relay will cause compressor failure.
		C.	Compressor malfunction	C.	Replace compressor
5.	Warm beer	A.	Defective Pump (check motor also)	A.	Check return line in reservoir for liquid flow. Replace pump on 125', 250', and 500' units. Check condition of key between pump and motor.
		B.	Defective motor (check pump also)	B.	Replace motor
		C.	Refrigeration unit not running	C.	Refer to #2
		D.	Trunk lines located in overheated area	D.	Remove from any hot water pipes or kitchen area with stove or glass washer.
		E.	Trunk lines flooded in PVC chase.	E.	Remove lines from PVC, thoroughly dry PVC and repair or replace trunk line as needed.
		F.	Uninsulated or poorly insulated lines	F.	All lines should be fully insulated from cooler into dispenser. Includes glycol lines from power pack into cooler.
		G.	Thermostat	G.	Adjust temperature to colder setting.
		H.	Condenser fan motor not working	H.	Replace condenser fan motor
		I.	Freon Leak	I.	Repair leak and recharge
		J.	Dirty condenser	J.	Clean the condenser
		K.	Condensation inside trunk line insulation (may be caused from cleaning lines)	K.	Check trunk housing in areas for drooping or low spots, split insulation approximately 5" and separate. Allow any water to drain, then air dry the seal closed.

TYPICAL SPARE PARTS

COMPONENT	PART NUMBER	MMPP4301-EP	MMPP4301	MMPP4302	MMPP4303	MMPP4305	MMPP4307
Vane Pump and Motor Assembly	MMPP4301-PPM		X	X			
Pump Insulation	MM-IPCPRO		X	X	X	X	X
Vane Pump Assy	PP4301-PPA		X	X	X	X	X
Motor (1/3 HP)	MMPP4301-M		X	X			
Motor (1/3 HP 220 Volt)	MMPP4305-M				X	X	X
Vane Pump Key	MM-3362-2		X	X	X	X	X
Clamp, Pump Connectors	MM-BC3-KIT		X	X	X	X	X
Nipple for Vane Pump-Straight	617C		X	X	X	X	X
Vertical Pump	MMPP4301-EPVP	X					
Thermostat Danfoss ERC 112C	MMPP080G3206	X	X	X	X	X	X
Compressor MPP4301 Series	MMPP4301-EP-C	X	X				
Refrigeration Deck MPP4301 Series	MMPP4301-UPPER		X				
Refrigeration Deck MPP4302 Series	MMPP4302-UPPER			X			
Compressor MPP4302 Series	MMPP4302-C			X			
Compressor MPP4303 Series	MMPP4303-C				X		
Compressor MPP4305 Series	MMPP4305-C					X	
Compressor MPP4307 Series	MMPP4307-C						X
On/Off Power Switch	MMPP4301-SW-P		X	X	X	X	X

WATER COOLED, WATER HOOK UP SCHEMATIC

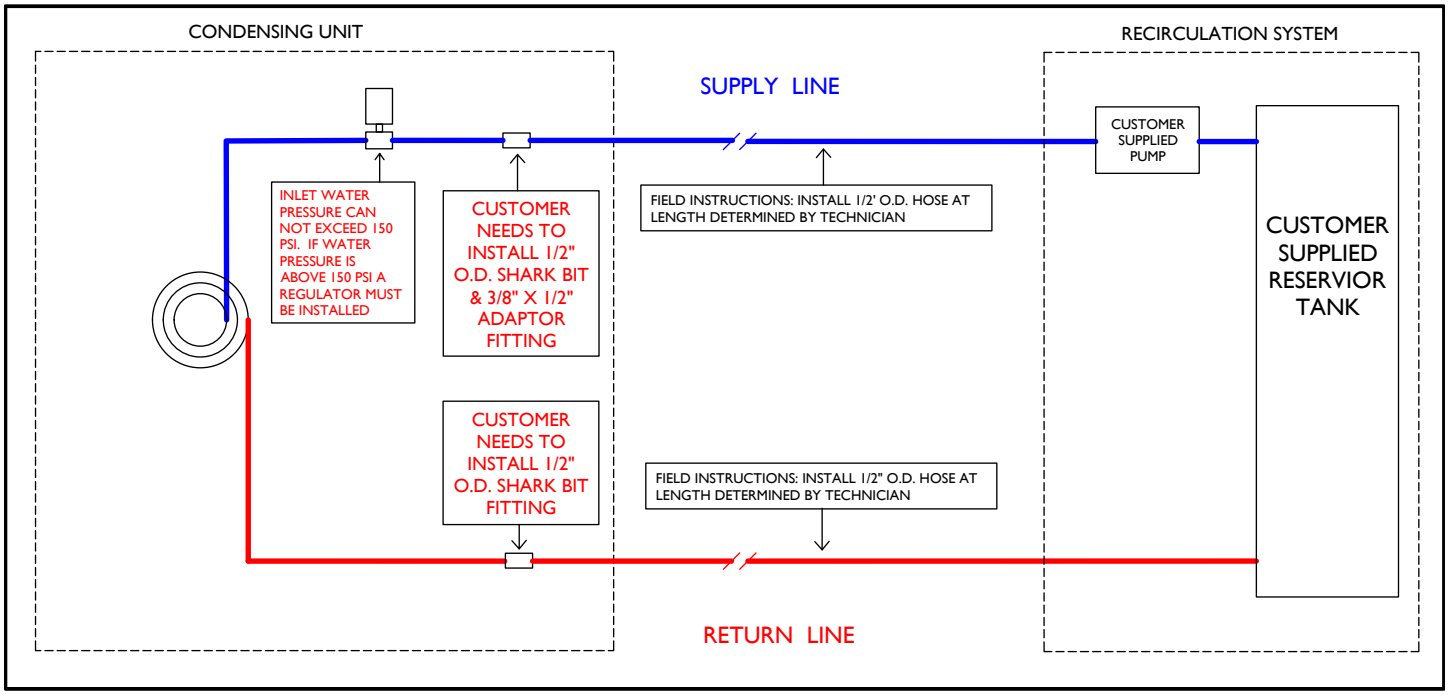

WIRING DIAGRAMS

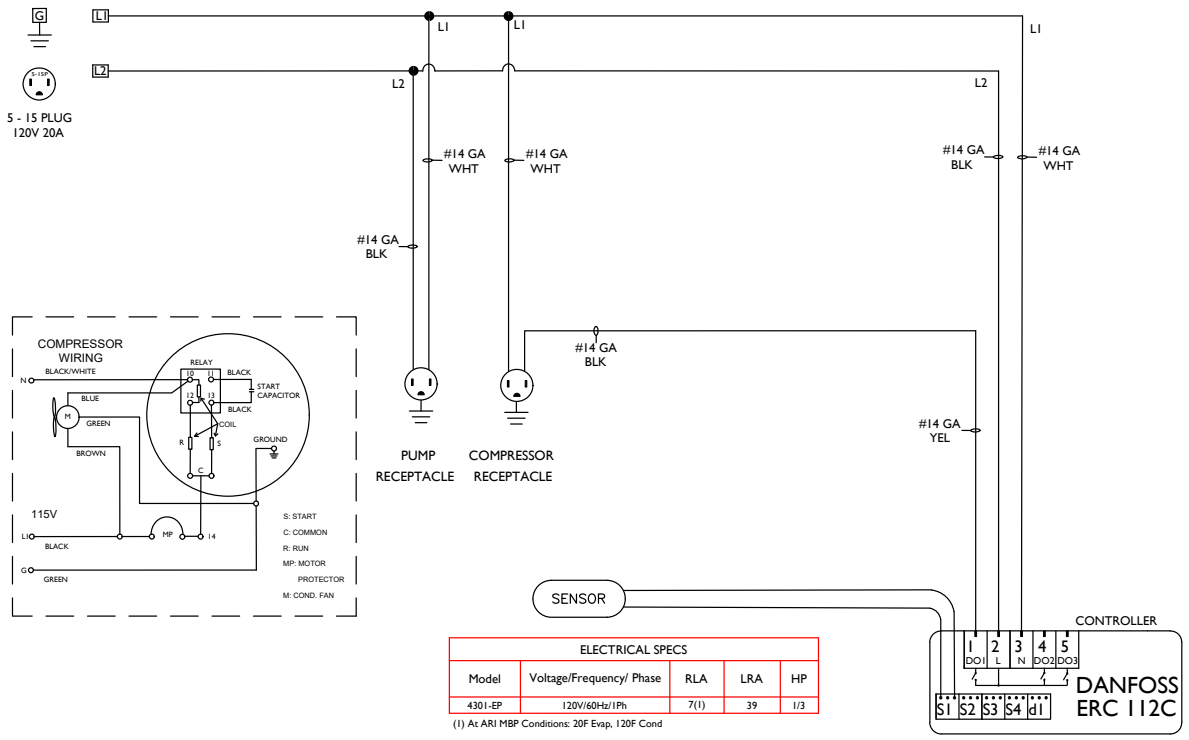

ELECTRICAL SPECS				
Model	Voltage/Frequency/ Phase	RLA	LRA	HP
4301-EP	120V/60Hz/1Ph	7(1)	39	1/3

(1) At ARI MBP Conditions: 20F Evap, 120F Cond

MMPP4301-EP

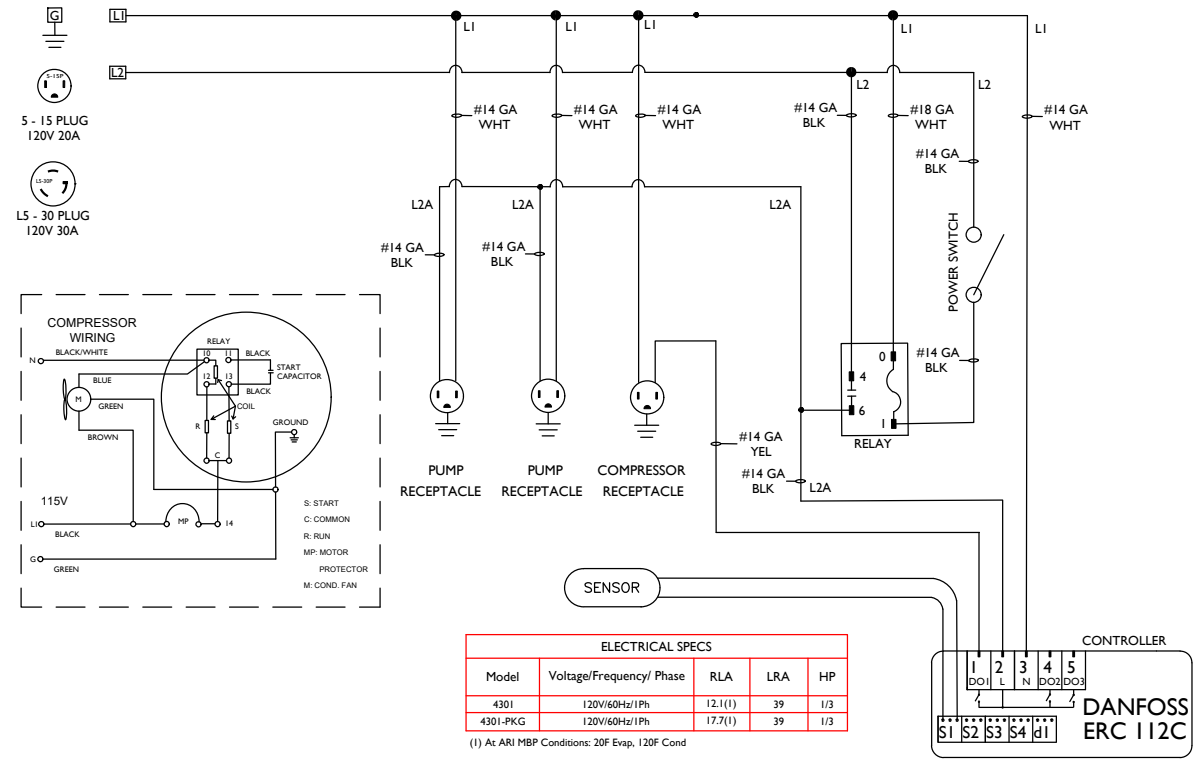

ELECTRICAL SPECS				
Model	Voltage/Frequency/ Phase	RLA	LRA	HP
4301	120V/60Hz/1Ph	12.1(1)	39	1/3
4301-PKG	120V/60Hz/1Ph	17.7(1)	39	1/3

(1) At ARI MBP Conditions: 20F Evap, 120F Cond

MMPP4301 / MMPP4301-PKG

WIRING DIAGRAMS

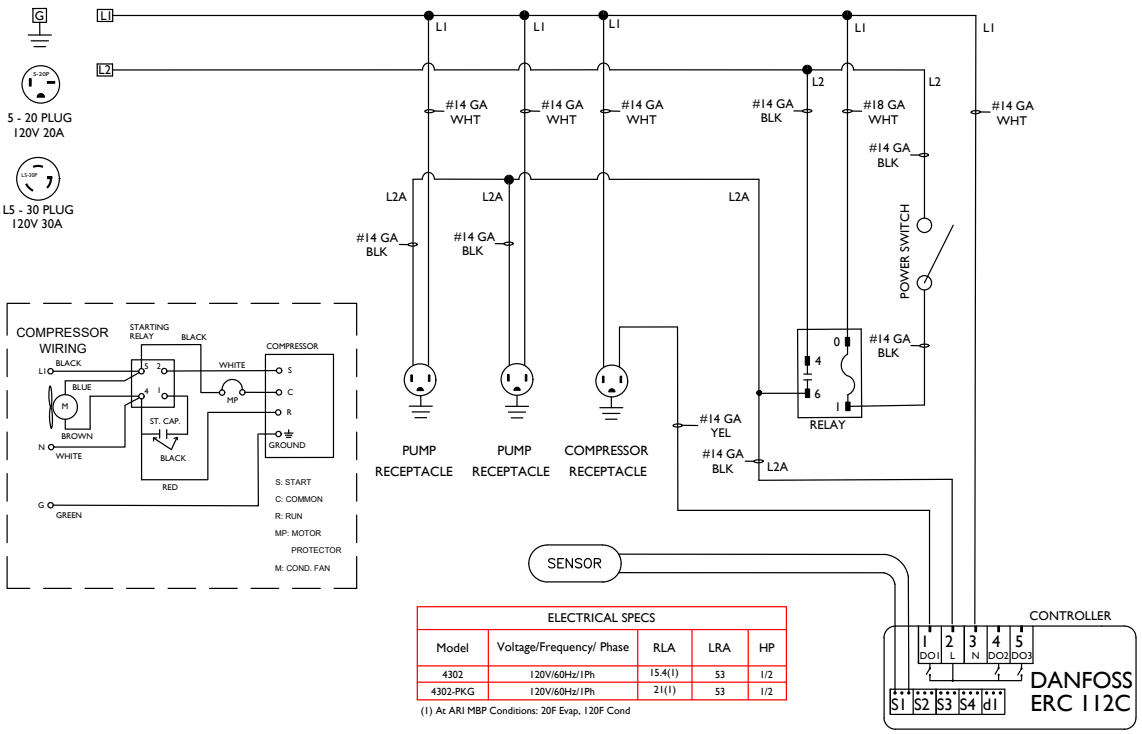

ELECTRICAL SPECS				
Model	Voltage/Frequency/ Phase	RLA	LRA	HP
4302	120V/60Hz/1Ph	15.4(1)	53	1/2
4302-PKG	120V/60Hz/1Ph	21(1)	53	1/2

(1) At ARI MBP Conditions: 20F Evap, 120F Cond

MMPP4302 / MMPP4302-PKG

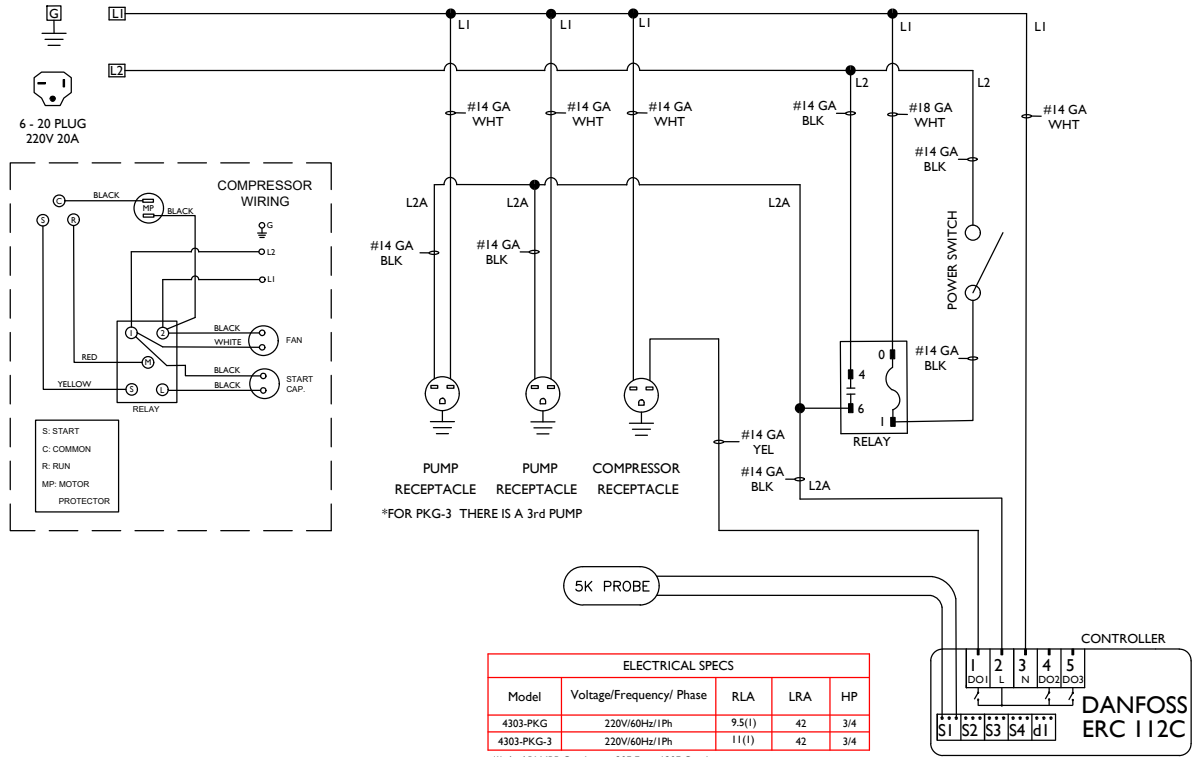

ELECTRICAL SPECS				
Model	Voltage/Frequency/ Phase	RLA	LRA	HP
4303-PKG	220V/60Hz/1Ph	9.5(1)	42	3/4
4303-PKG-3	220V/60Hz/1Ph	11(1)	42	3/4

MMPP4303-PKG / MMPP4303-PKG-3

WIRING DIAGRAMS

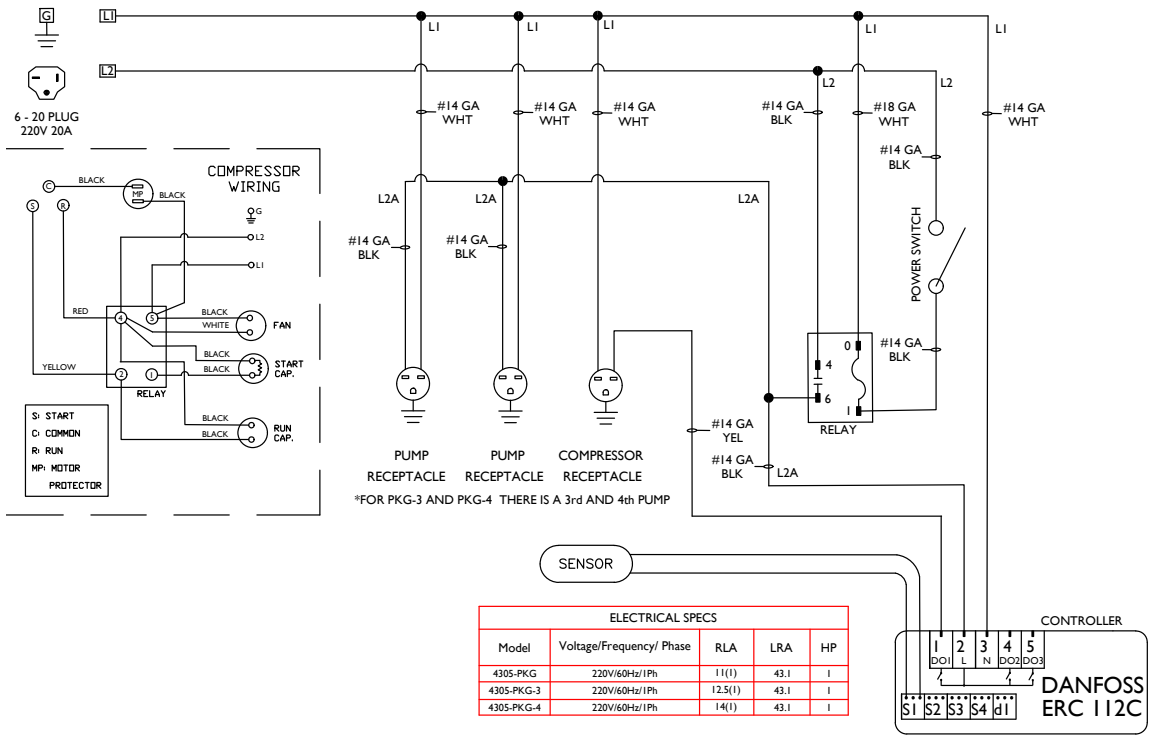

ELECTRICAL SPECS				
Model	Voltage/Frequency/ Phase	RLA	LRA	HP
4305-PKG	220V/60Hz/1Ph	11(1)	43.1	1
4305-PKG-3	220V/60Hz/1Ph	12.5(1)	43.1	1
4305-PKG-4	220V/60Hz/1Ph	14(1)	43.1	1

MMPP4305-PKG / MMPP4305-PKG-3 / MMPP4305-PKG-4

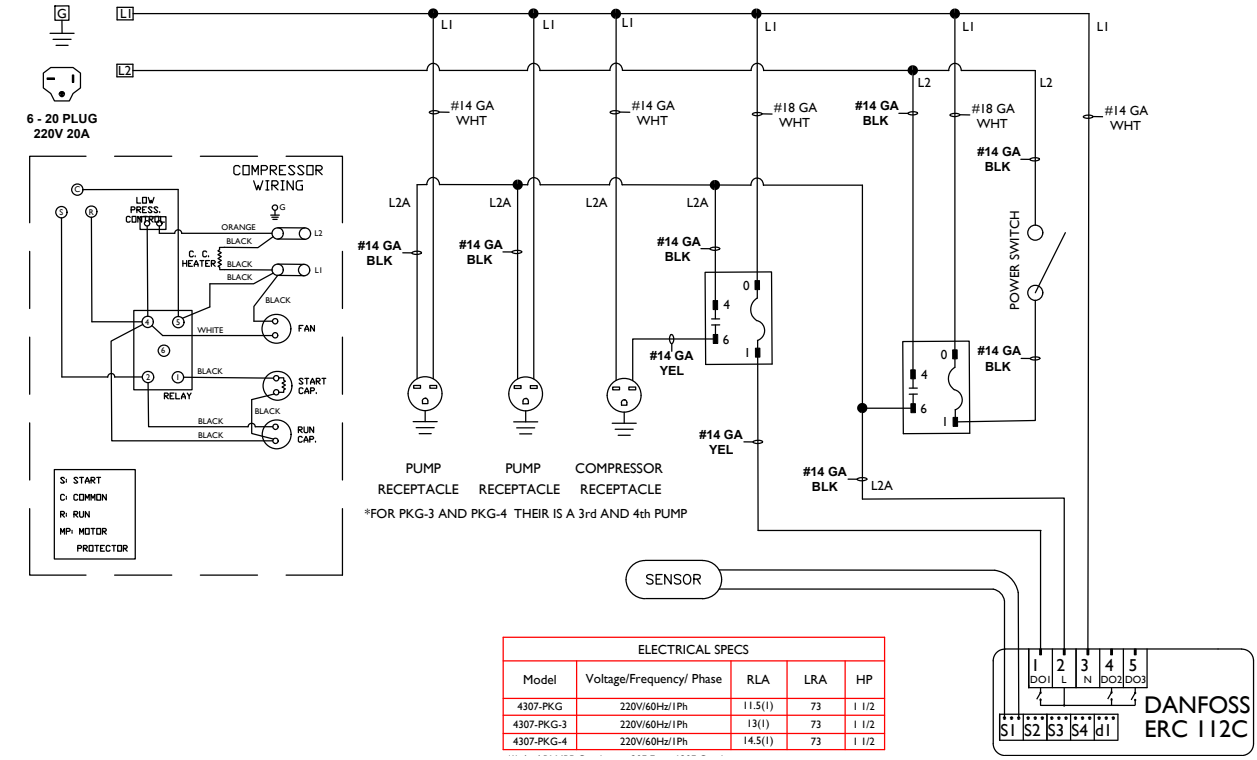

ELECTRICAL SPECS				
Model	Voltage/Frequency/ Phase	RLA	LRA	HP
4307-PKG	220V/60Hz/1Ph	11.5(1)	73	1 1/2
4307-PKG-3	220V/60Hz/1Ph	13(1)	73	1 1/2
4307-PKG-4	220V/60Hz/1Ph	14.5(1)	73	1 1/2

MMPP4307-PKG / MMPP4307-PKG-3 / MMPP4307-PKG-4

WARRANTY

All power packs carry a full warranty against defects in material and workmanship for a period of eighteen (18) months on parts and one (1) year on labor. The compressor is warrantied for an additional three and one-half (3-1/2) years. All loss of sales must be borne by the purchaser.

WARRANTY CLAIMS PROCEDURE:
Purchaser shall notify Micro Matic of any defect discovered in the Product during the Warranty Period, and obtain a return authorization number. Purchaser must ship the Product per Micro Matic's instruction. After receipt of the Product, Micro Matic shall, at its option, repair (or authorize the repair of), or replace or refund the purchase price for the Products found by Micro Matic to be defective. Micro Matic's determination of defects is final. Failure by Purchaser to give notice of claims of breach of warranty within the Warranty Period shall be deemed an absolute and unconditional waiver of Purchaser's claim for such defects. Products repaired or replaced during the Warranty Period shall be covered by the foregoing warranties for the remainder of the original Warranty Period or ninety (90) days from the date of delivery of the repaired or replaced Products, whichever is longer.

ALL REPAIRS MUST BE FIRST AUTHORIZED BY MICRO MATIC PER THE ABOVE PROCEDURE. UNAUTHORIZED REPAIRS WILL NOT BE REIMBURSED BY MICRO MATIC UNDER ANY CIRCUMSTANCES.

Micro Matic is not responsible for parts damaged from factors including, but not limited to any part that has been subject to misuse, neglect, alteration, accident, unauthorized service, abuse, or to any damage caused by transportation. This warranty does not cover items subject to normal wear and tear (gaskets, seals, o-rings, etc.).

Unless clearly specified all Micro Matic power packs are designed to perform in normal environmental conditions with a temperature range of 50-90 degrees Fahrenheit. All Micro Matic power packs should be placed indoors in well-ventilated areas. To avoid damage to seals, connectors or other critical items, equipment, including Micro Matic power packs, heaters, faucets and dispense towers should never be exposed to subzero temperatures.

PURCHASER RESPONSIBILITY:
Except as expressly provided in this Agreement, Purchaser assumes all other responsibility for any loss, damage, or injury to persons or property arising out of, connected with, or resulting from the use of Products, either alone or in combination with other products or components. In no event will Micro Matic be responsible for incidental, consequential or punitive damages of any kind, including without limitation, claims for loss of beer, loss of gas or loss of sales.

OTHER WARRANTIES DISCLAIMED:
These are the sole and exclusive warranties and conditions given by Micro Matic with respect to the products and services and are in lieu of and exclude all other warranties or conditions, express or implied, arising by operation of law or otherwise, including without limitation, warranties of merchantability, fitness for a particular purpose and non-infringement, whether or not the purpose or use has been disclosed to Micro Matic in specifications, drawings or otherwise, and whether or not Micro Matic's products are specifically designed and/or manufactured by Micro Matic for purchaser's use or purpose.

LIMITATION OF REMEDY:
Purchaser's sole and exclusive remedy for breach of any warranty or condition under this Article IV shall be limited to the repair, correction, or replacement of the defective Products.

02035-MM-M-0926 ©Micro Matic USA, Inc. All Rights Reserved. Micro Matic reserves the right to change specifications without notice.